Technical data sheet

Height-adjustable heavy-duty cassette for tube body RK-FRSL, nominal size R9, stainless steel

Item number: 7409472

Round heavy-duty cassette for tube body of nominal size R9 for the installation of accessories in trunking systems, raised and cavity floors, in dry or wet-cleaned floors. Load class 2 to 20 kN.

Height-adjustable heavy-duty cassette with tube body with a load bearing capacity of 2-20 kN, 3-compartment. 3 APMT5 cover plates can be installed. For the installation of three UT4 universal supports for nine single accessories with support ring/support clamp or 12 Modul 45 devices. The tube body is not contained in the scope of delivery.

Height-adjustable round cassette, 3-compartment, of nominal size 9, for tube bodies. For the installation in trunking systems and in raised and cavity floors in dry- or wet-cleanded floors in indoor areas. Load class 2 to 20 kN. Three cover plates APMT5 can be installed.

A2 Stainless steel

Master data

Item number	7409472
Type	RKFR2 9 SL2V2 25
Description 1	Heavy-duty cassette
Description 2	for tube, 20 kN
Manufacturer	OBO
Dimension	Ø305mm
Material	Stainless steel 1.4301
Smallest sales unit	1
Unit of quantity	Piece
Weight	647 kg
Weight unit	kg/100 pc.
CO2 Footprint (GWP) Cradle-to-Gate	25,7308 kg CO2e / 1 Piece

Technical data sheet

Height-adjustable heavy-duty cassette for tube body RK-FRSL, nominal size R9, stainless steel

Item number: 7409472

Dimensions

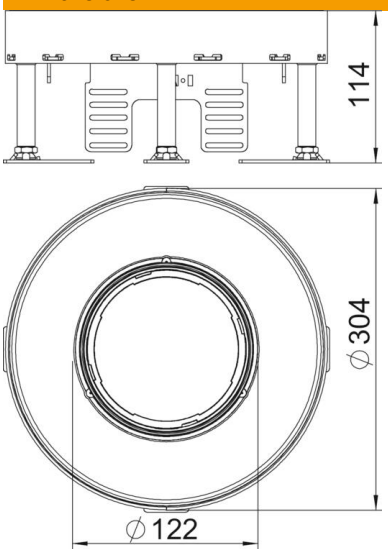

Dimension h	114 mm

Technical data

Number of installable devices	12
Number of mounting boxes	3
Number of cable outlets	1
Cover version	Round
Cable outlet version	Lowerable tube body
Floor care	Wet
Decouplable	no
Floor height, max.	159 mm
Floor height, min.	114 mm
Suitable for raised floor installation	yes
Suitable for cavity floor installation	yes
Suitable for underfloor box	350
Device support to accept mounting boxes	yes
Nominal size for device installation units	R9
Height-adjustment range, max.	159 mm
Height-adjustment range, min.	114 mm
ROHS-conformant	Exempt
Protection rating (IP) when used	IP20
Protection rating (IP) when unused	IP44
Protection rating IK code	IK10
Heavy-duty version	yes
Heavy load class	20 kN (OBO SL2)
Installation system type	UT4
Floor covering thickness	25 mm